Timber Sectional Doors

Timber Sectional Doors

Timber Sectional Doors are available in a wide variety of sophisticated panel designs and finishes and provide a warm, cozy and welcoming impression. Typically manufactured from Western Red Cedar, these quality doors can truly enhance and complement the façade.

FFEATURES

- Western Red Cedar timber
- Easy to operate
- Appealing designs
- Optional windows

MAXIMUM DOOR SIZE

- Maximum Height: 3320mm
- Maximum Width: 6000mm

NOTE: Maximum dimensions are a guide only.

RECOMMENDED SPECIFICATIONS

Timber Sectional Door in selected panel design and finish. The sectional door operates by means of horizontal hinged panels that travel vertically to the top of the door-opening and then horizontally under the ceiling.

NOTE: When specifying a sectional overhead door, it is important to also specify the door's intended or expected usage (i.e. number of operations per day or number of vehicles in car park). Sectional Doors are suitable for applications with a usage up to 50 operations per day. In applications requiring higher usage, counterweight doors or sliding doors are highly recommended. When specifying, please also nominate the tracking installation system required e.g. Standard Headroom, High Lift etc.

Timber Sectional Doors

Timber Sectional Doors

PANEL DETAILS

As standard panels are manufactured from Western Red Cedar 'Standard Grade'. Alternative timbers, may be available upon specification. NOTE: Due to weight and availability of alternative timbers, size or design restrictions may apply.

Timber panel thicknesses vary depending on the chosen design. The 'Hamilton' profile has horizontal slats and unless otherwise specified are V-joined together as standard. The selected timber profile is glued and nailed to an aluminium frame to form panels of up to 600mm in height.

BRACING

Where required by design to match the door size and weight, Steel Struts are used to brace the door.

FINISH

Timber Sectional Doors can be supplied with a fully sealed Sikkens finish. Fully sealed Sikkens finish is a colour sealer coat available in Dark Oak (as standard), Walnut or Mahogany. Other finish colours may be available. Alternatively, timber sectional doors may also be supplied; oiled (using CD50 oil); part sealed Sikkens (allowing customer to apply a suitable colour topcoat), primed (ready for customer to paint the door); or raw (allowing the end user to treat the door as desired).

The timbers used in Timber Sectional Doors are of a high quality; however due to the nature of timber itself, consistency of colours and patterns cannot be guaranteed.

TIMBER PRESERVATION

Like most exterior timbers, Western Red Cedar requires some tender loving care to keep it looking its best. To ensure long lasting timber protection, it is recommended that the end user inspects the door regularly and re-applies the appropriate finish at the first sign of timber ageing. Sikkens Superior Sealed timber finishes require re-application approximately every 2-5 years. As a guide, North or West facing doors should be recoated every 2 years, while South or East facing should be recoated every 4-5 years. Oiled doors should be re-coated more regularly (approx every 1-3 years).

WINDOWS (OPTIONAL)

Clear acrylic, glass or leadlight window designs can be provided to enhance the appearance of the door and façade and allow natural light to filter into the garage.

BOTTOM RAIL

A strong aluminium extruded bottom rail with a durable PVC weather seal is fitted to the bottom of the door in order to provide additional reinforcement and to minimise leaves and rain from entering under the door.

ADDITIONAL DOOR SEALS (OPTIONAL)

Additional door seals can be provided to seal the working clearance gap around the door. Seals for fire risk areas are designed to prevent embers from entering the garage and are manufactured from a flame retardant material. Door seals also help to reduce dust and dirt from entering the garage.

DOOR TRACKS

Standard vertical and horizontal tracks are manufactured from specially roll-formed heavy-duty galvanised steel of 50mm (2") profile. Standard tracks are designed to accommodate nylon track rollers. NOTE: 75mm (3") tracks with steel track rollers are used for large or heavy doors, or where required for frequent usage. Horizontal tracks are reinforced with 40mm by 40mm steel angle and are are supported 200mm-300mm from each end. Where tracks exceed 3000mm, additional centre supports will also be provided.

SPRINGS

Torsion springs are typically made from 5.6mm to 9mm thick oil tempered spring wire and are designed to suit the door size and weight and tensioned to correctly balance the door. The springs (as standard) are mounted along a steel cross shaft directly above the door behind the lintel. NOTE: For low headroom track applications, the cross shaft & springs may be required to be mounted at the end of the horizontal tracks.

HARDWARE

Cable drums are attached to each end of the steel cross shaft. Galvanised steel wire cables run from the cable drums to the bottom steel anchor brackets at the bottom ends of the door. As the cable drums turn, by means of the torsion springs and cross shaft, the cables wind on or off the grooves of the cable drums to lift the door up or down.

Sectional door support brackets are manufactured from galvanised steel. Horizontal track support brackets are attached to adjacent walls (where wall distance is 600mm or less) or supported from the ceiling.

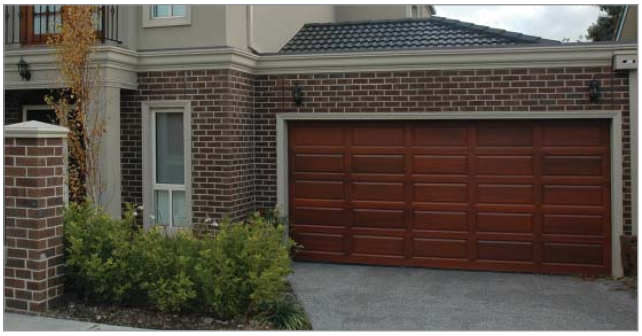

AIRPORT DOORS
Quality Door Solutions
www.airportdoors.com.au

VIC & TAS
69-75 High Street
Melton VIC
PO Box 330
Melton VIC 3337
T: (03) 9971 1444
F: (03) 9971 1466

SA & NT
16 Krawarri Street
Lonsdale SA
PO Box 487
Morphett Vale SA 5162
T: (08) 8326 0466
F: (08) 8384 2501

WA
5 Keates Road
Armadale WA
PO Box 906
Armadale WA 6992
T: (08) 9399 5790
F: (08) 9399 5702

Timber Sectional Doors

Timber Sectional Doors

Sectional door hinges are manufactured from galvanised steel for strength and durability. Doors that exceed 5500mm in width are fitted with double hinge roller brackets and rollers with extended shafts.

Standard track rollers consist of steel ball bearings complete with a nylon outer casing for quieter operation. For large, heavy, or frequent operation doors (e.g. 20+ operations per day), steel track rollers with steel ball bearings are used for added strength.

FIXING REQUIREMENTS

The building construction (typically solid brick, concrete or steel) must be structurally sound and have adequate strength to support the Sectional Door and its fixing requirements. Overhead fixing points for the horizontal tracks and central motor rack are also required. Consult Technical Sales for location and further details.

LOCKING

Manually operated timber sectional doors can be either fitted with; spring loaded shoot bolts on the inside (padlocks not included), or a "T" handle lock incorporating a two point locking system. NOTE: Motorised sectional doors are self-locking and are not fitted with a manual lock as standard.

OPERATION

Sectional Doors operate from behind the opening and are typically made up of four or more horizontal hinged panels. The panels are fitted with track rollers on each side to enable the door to travel smoothly within specially designed sectional door tracks. In the open position the door rests horizontally overhead as standard. Alternative track installation (e.g. high lift or vertical lift) may be available depending on the door size, weight and application (limitations may apply). Sectional doors can be operated by hand or motorised.

MOTORISATION

Sectional overhead doors are typically motorised by a centrally mounted overhead 'trolley' type operator, either of single-phase (24DC/240v or 240v) or three-phase (415v) power depending on size, weight and application of door. Residential applications are supplied as standard with 24DC/240v automated operator unless otherwise specified. The operator head is mounted under the ceiling to a central steel drive rack consisting of a chain or belt drive and a travelling carriage. A coupling arm connects the carriage to the top of the door enabling the door to open and close.

Standard operators are fitted with a pull cord to enable emergency manual operation in case of power outage. Residential sectional operators come complete with hand transmitters for remote control access. Unless otherwise specified, commercial sectional operators come with a standard push-button station only. Specific access control requirements should be specified by the client.

Alternative direct drive motorisation, with either single- or three-phase power is also available. In some circumstances (e.g. heavy or large doors, doors requiring commercial access control, or doors installed with high lift or vertical lift tracks) direct drive motorisation is the only suitable option. Direct drive operators are fitted to the side of the door and directly drive the steel cross shaft. The operator includes a pull cord or a hauling chain (depending on the operator) to enable emergency manual operation in case of power outage.

The provision of adequate mains power supply and GPO or isolator (as required) to motor location is the responsibility of the client. Wiring from the isolator and commissioning of the door, motor controllers and any ancillary hardware is by client, unless otherwise stated in writing.

Optional extras, such as access control accessories, safety and security accessories including; slack rope tension monitor, automatic lock mechanism and safety reversing sensors etc., are available upon specification. For further information see Door Operators & Accessories.

OPTIONS

- Windows
- Additional door seals
- Tapered bottom

AIRPORT DOORS
Quality Door Solutions
www.airportdoors.com.au

VIC & TAS
69-75 High Street
Melton VIC
PO Box 330
Melton VIC 3337
T: (03) 9971 1444
F: (03) 9971 1466

SA & NT
16 Krawarri Street
Lonsdale SA
PO Box 487
Morphett Vale SA 5162
T: (08) 8326 0466
F: (08) 8384 2501

WA
5 Keates Road
Armadale WA
PO Box 906
Armadale WA 6992
T: (08) 9399 5790
F: (08) 9399 5702

Standard Headroom

Technical Specs: Sectional Doors

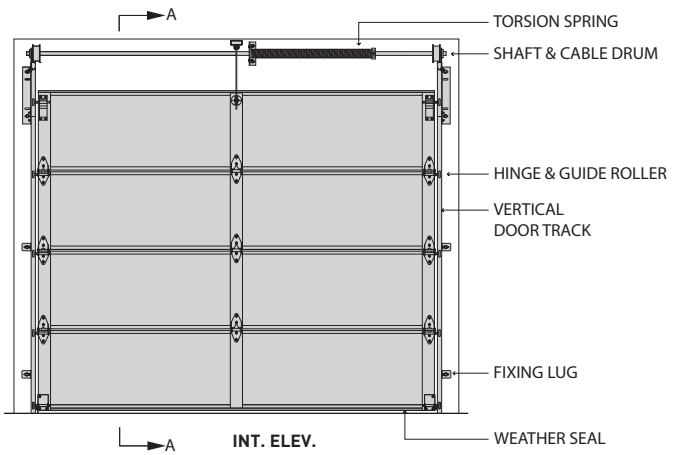

INT. ELEV.

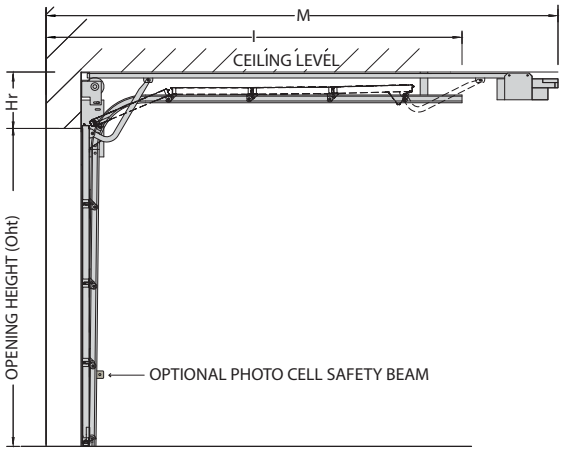

SECTION A-A

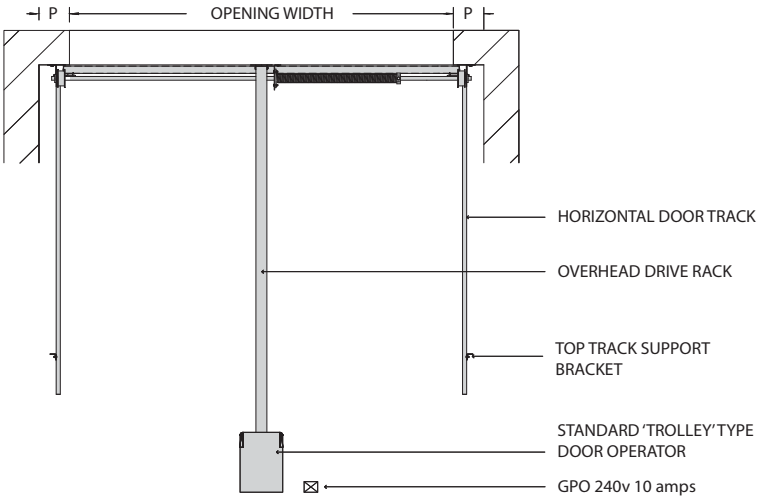

PLAN VIEW

NOTE:

- SHOWN IS MINIMUM STANDARD HEADROOM INSTALLATION.
- THE DOOR OPERATOR AND DRIVE RACK FIT DIRECTLY UNDER THE CEILING IN THE MIDDLE OF THE OPENING.
- WHERE THERE IS MORE HEADROOM THAN NEEDED, STEEL DROPPERS ARE USED TO SUSPEND THE OPERATOR IN POSITION.
- OVERHEAD SUPPORTING STRUCTURE IS REQUIRED AT OPERATOR LOCATION.
- NOTE: ALTERNATIVE DIRECT DRIVE OPERATORS ARE ALSO AVAILABLE. THESE TURN THE SHAFT DIRECTLY USING A THROUGH SHAFT GEARBOX AND MOTOR.

CLEARANCE DETAILS (STANDARD HEADROOM)

Oht*	Hr	I	M	OPERATION	P
Sectional Door - up to 175kg					
3600	350	Oht + 400	N/A	Hand Operation	120
3600	380	Oht + 400	Oht + 1000	Motorisation: 'Trolley' type operator	120
Sectional Door - 176-250kg					
3600	430	Oht + 400	Oht + 1000	Motorisation: 'Trolley' type operator	200
Heavy Duty Sectional Door - 251-350kg (not recommended for residential use)					
4200	450	Oht + 400	Oht + 1000	Motorisation: 'Trolley' type operator	200

Notes:

- * **Oht** = Opening Height

AIRPORT DOORS
Quality Door Solutions
www.airportdoors.com.au

VIC & TAS
69-75 High Street
Melton VIC
PO Box 330
Melton VIC 3337
T: (03) 9971 1444
F: (03) 9971 1466

SA & NT
16 Krawarri Street
Lonsdale SA
PO Box 487
Morphett Vale SA 5162
T: (08) 8326 0466
F: (08) 8384 2501

WA
5 Keates Road
Armadale WA
PO Box 906
Armadale WA 6992
T: (08) 9399 5790
F: (08) 9399 5702

Track Installation Options

Technical Specs: Sectional Doors

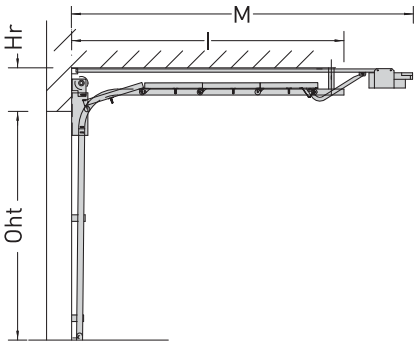

Sectional Door - Standard Headroom

Standard headroom installation is the most common and recommended type of sectional door installation. This installation is standard with all sectional doors unless otherwise specified.

Please see Standard Headroom Technical Specification drawing and clearance information.

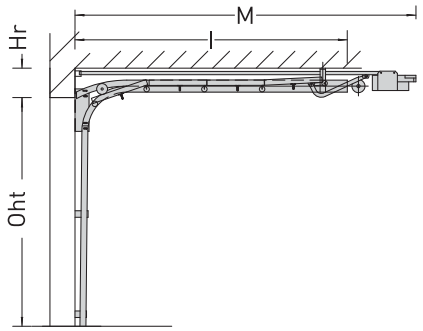

Sectional Door - Low Headroom (Non-Standard)

Low headroom installation is used in circumstances where standard installation is not achievable. **NOTE**: Door size, weight and application restrictions apply. Low headroom installation is not suitable for large or heavy doors, or applications with multiple car parks (such as commercial car parks).

CLEARANCE DETAILS						
Oht*	Hr	I	M	OPERATION	P	G
Low Headroom - up to 175kg						
3600	240	Oht + 600	Oht + 1000	Hand Operation	150	N/A
3600	270	OHt + 600	Oht + 1000	Motorisation: 'Trolley' type operator	150	N/A
3600	320	OHt + 600	Oht + 1000	Motorisation: 'Trolley' type operator	200	N/A

Notes:

*Oht = Opening Height

Note:

Non standard track installations are subject to size, weight and application (e.g. frequency of use) restrictions. Unless otherwise specified, installation type will be standard headroom installation. Please stipulate track installation type required when specifying. Consult Technical Sales for further information.

AIRPORT DOORS
Quality Door Solutions
www.airportdoors.com.au

VIC & TAS
69-75 High Street
Melton VIC
PO Box 330
Melton VIC 3337
T: (03) 9971 1444
F: (03) 9971 1466

SA & NT
16 Krawarri Street
Lonsdale SA
PO Box 487
Morphett Vale SA 5162
T: (08) 8326 0466
F: (08) 8384 2501

WA
5 Keates Road
Armadale WA
PO Box 906
Armadale WA 6992
T: (08) 9399 5790
F: (08) 9399 5702

Track Installation Options

Continued

Technical Specs: Sectional Doors

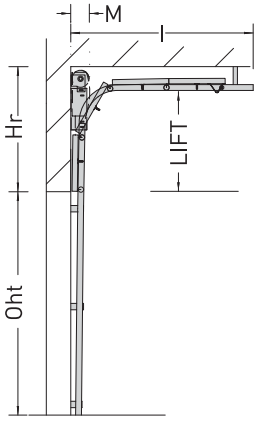

Sectional Door - High Lift Installation (Non-Standard)

High Lift installation is ideal for applications where there is a large distance between the ceiling and the bottom of the lintel and where maximum internal height clearance is required (when door is open). Motorisation of high lift sectional doors is by direct drive.

CLEARANCE DETAILS						
DIMENSIONS					SIDEROOM	
Oht*	Hr	I	M	OPERATION	P	G
High Lift						
3600	Lift+310	Oht+600-Lift	400	Motorisation: Direct Drive	200	380

Notes:

- *Opening Height
- Lift= Clear vertical distance between bottom of lintel & horizontal track

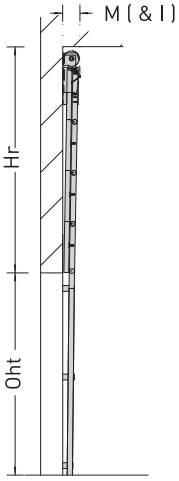

Sectional Door - Vertical Lift Installation (Non-Standard)

Vertical Lift installation for sectional doors is available as an option; however the Vertical Lift Counterweight Door is a much more superior option, as there are less moving components. Vertical Lift Sectional Door motorisation is by direct drive.

CLEARANCE DETAILS						
DIMENSIONS					SIDEROOM	
Oht*	Hr	I	M	OPERATION	P	G
Vertical Lift						
3600	Oht+310	450	400	Motorisation: Direct Drive	200	380

Notes:

- *Opening Height

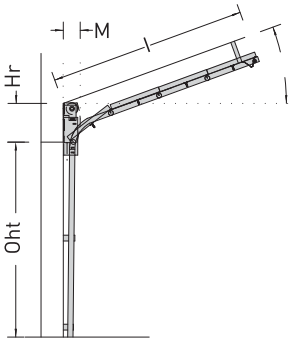

Sectional Door - Angle Lift Installation (Non-Standard)

Angle Lift (or follow the roof) installation can be provided up to a maximum angle of 20 degrees and maximum of 10 operations per day. NOTE: Door size, weight and application restrictions apply. Angle Lift installation is not suitable for large or heavy doors, or applications with multiple car parks (such as commercial car parks). Motorisation of Angle Lift installation can be by either 'trolley' type or direct drive, depending on application.

CLEARANCE DETAILS						
DIMENSIONS					SIDEROOM	
Oht*	Hr	I	M	OPERATION	P	G
Angle Lift						
3600	Min 350	Oht+600-350	400	Motorisation: Direct Drive	200	380

Notes:

- *Opening Height

NOTE: Non standard track installations are subject to size, weight and application (e.g. frequency of use) restrictions. Unless otherwise specified, installation type will be standard headroom installation. Please stipulate track installation type required when specifying. Consult Technical Sales for further information.

AIRPORT DOORS
Quality Door Solutions
www.airportdoors.com.au

VIC & TAS
69-75 High Street
Melton VIC
PO Box 330
Melton VIC 3337
T: (03) 9971 1444
F: (03) 9971 1466

SA & NT
16 Krawarri Street
Lonsdale SA
PO Box 487
Morphett Vale SA 5162
T: (08) 8326 0466
F: (08) 8384 2501

WA
5 Keates Road
Armadale WA
PO Box 906
Armadale WA 6992
T: (08) 9399 5790
F: (08) 9399 5702

Door Tracks & Direct Drive

Technical Specs: Sectional Doors

SECTIONAL DOORS
STANDARD DOOR TRACKS

STANDARD 2" TRACK

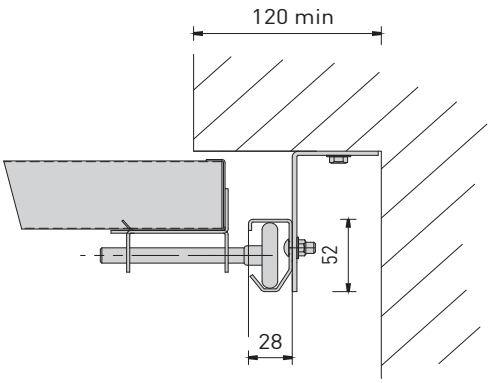

HEAVY DUTY 3" TRACK

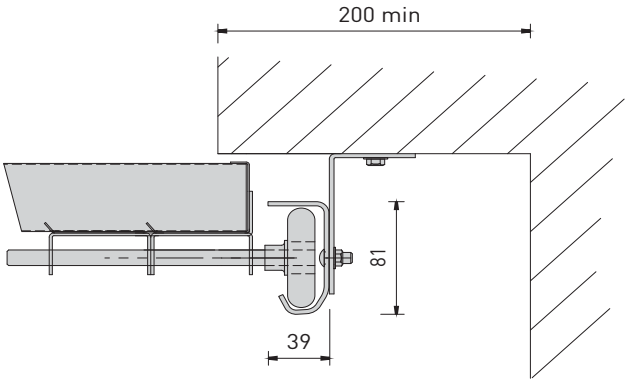

DIRECT DRIVE ('JACK SHAFT') OPERATOR

- DIRECT DRIVE IS AN ALTERNATIVE METHOD OF MOTORISATION MAINLY USED WITH HIGH, ANGLED OR VERTICAL LIFT INSTALLATIONS, AND HEAVY OR LARGE DOORS.
- THE OPERATOR DIRECTLY DRIVES THE TORSION SHAFT.
- ELECTRICAL OR MECHANICAL MEANS OF MONITORING THE CABLE TENSION IS REQUIRED FOR SAFETY AND SEPERATE LOCKING OF THE DOOR IS ADVISED.
- AS A VARIETY OF OPERATORS ARE USED, THIS DIAGRAM IS INDICATIVE ONLY.
- THE OPERATOR IS SELECTED TO SUIT THE APPLICATION AS WELL AS DOOR SIZE, WEIGHT AND INSTALLATION.
- TYPICALLY 415v 3 PHASE OPERATORS ARE USED WITH COMMERCIAL CARPARK DOORS FOR INSTANCE
- SAFETY SENSORS (EG. PE BEAMS, SAFETY EDGE SENSORS ETC.) ARE RECOMMENDED.

NOTE:
Direct Drive Operators are not suitable for Low Headroom installations

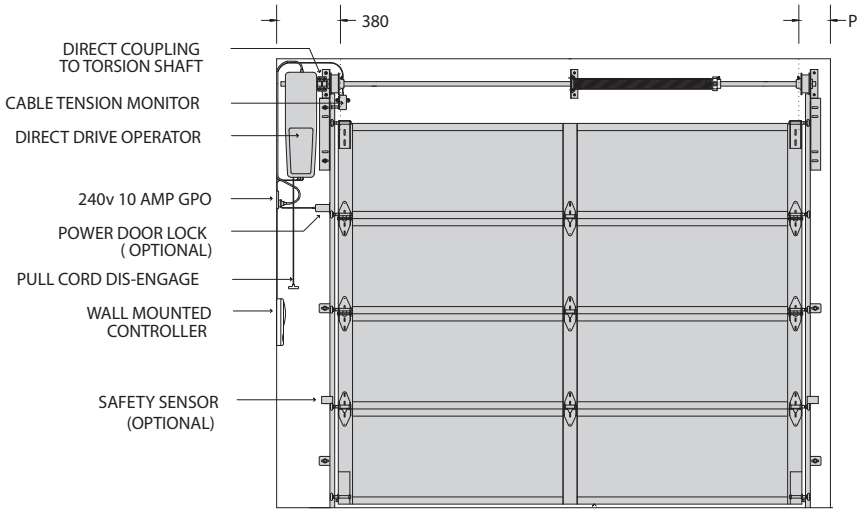

INTERNAL ELEVATION

AIRPORT DOORS
Quality Door Solutions
www.airportdoors.com.au

VIC & TAS
69-75 High Street
Melton VIC
PO Box 330
Melton VIC 3337
T: (03) 9971 1444
F: (03) 9971 1466

SA & NT
16 Krawarri Street
Lonsdale SA
PO Box 487
Morphett Vale SA 5162
T: (08) 8326 0466
F: (08) 8384 2501

WA
5 Keates Road
Armadale WA
PO Box 906
Armadale WA 6992
T: (08) 9399 5790
F: (08) 9399 5702